NEUTRONIC MODELING AND ANALYSIS

OF THE TRANSIENT REACTOR TEST FACILITY

By

Sean Moran

A Thesis Submitted to the Graduate
Faculty of Rensselaer Polytechnic Institute
in Partial Fulfillment of the
Requirements for the Degree of

MASTER OF SCIENCE

Major Subject: Nuclear Engineering

Approved by the
Examining Committee

_____
Wei Ji
Thesis Advisor

_____
Yaron Danon, Member

_____
Peter Caracappa, Member

Rensselaer Polytechnic Institute
Troy, New York

November 2015
(For Graduation December 2015)

CONTENTS

LIST OF TABLES

LIST OF FIGURES

ABSTRACT

The Transient Reactor Test Facility is a nuclear research reactor operated by the Idaho National Laboratory. It was used for the testing of nuclear reactor fuels and materials from 1959 until 1994. It has remained inactive since its shutdown in 1994. Recently, the Department of Energy has begun preparations to restart the facility. This restart will be accompanied by many potential changes to the core and facilities. As such, a reliable model of the core is needed to facilitate the core modifications and subsequent experiment simulations. This paper details the creation of a model made to fulfill this need.

1. INTRODUCTION

1.1 Overview of the TREAT

The Transient Reactor Test Facility (TREAT) is an air-cooled, heterogeneous nuclear reactor created for the purpose of testing reactor fuels and structural materials under various conditions made to emulate conditions in a nuclear power plant. Testing is performed by placing fuel or other materials into the core and subjecting them to short bursts of very high-power radiation. This allows for the testing of fuel meltdowns, metal-water reactions, and the behavior of ceramic fuels at high temperature. Data collected in these experiments can then be used to determine the safety margins of components in extreme scenarios. [1]

The TREAT control rods are moved out of the core using a lead screw and motor. This allows for a maximum reactivity insertion rate of 50 pcm per second. Transients in the core are stopped using a compressed air system. This system is capable of moving the control rods 4 feet into the core in 80 milliseconds. The power drop caused by this motion is almost instantaneous. [2]

TREAT is located at Idaho National Laboratory. Operations first began in 1959. It operated for more than 35 years until the facility was shut down in April of 1994. During this period, the reactor underwent more than 6000 startups and performed almost 3000 material radiations. It underwent a major hardware overhaul in 1988, when it received new instrumentation and control systems, as well as a refurbishment of the control rod drive systems. [1]

TREAT consists of two buildings. They are the reactor building and the control building. The reactor building consists of a high bay section and a service wing. The high bay contains the reactor, instrument room, and the basement sub-reactor. The basement sub-reactor is where the control rod drive mechanisms are located. The service wing section contains the air coolant compressors and the boiler heating system. The control building contains all control panels and instrumentation required to remotely operate the reactor. [1]

1.2 Restarting the TREAT

The United States Department of Energy is currently undergoing preparations to restart the TREAT. The estimated date of completion for this project is 2018. [1]

The reason that the TREAT is being brought back online after more than 20 years in standby mode is that there is a growing need for transient testing capabilities. These types of tests will help to improve nuclear power plant performance, sustainability, and affordability, as well as make spent fuel easier to recycle. The need for this type of facility is especially high as there are only four transient test facilities worldwide (including the TREAT). The other three facilities are the Nuclear Safety Research Reactor in Japan, the Impulse Graphite Reactor in Kazakhstan, and the CABRI facility in France. [1]

1.3 Objectives

The objective of this project is to create a working Monte Carlo-based model of the TREAT reactor. This model can be used to predict the actual behavior of the reactor under various different conditions and core configurations.

It can produce data on neutron flux distributions, power distributions, delayed neutron fraction, and mean neutron generation time. This model will be used as a benchmark against which other, potentially faster, deterministic codes can be validated before they are used in predicting the behavior of the TREAT core. In addition, this model can be used to test the validity of older models with the modifications that are being made to the core during the reboot process.

2. DESCRIPTION OF THE TREAT CORE

The reactor core consists of a 19x19 grid of up to 361 rods. The types of rods that can be placed in these slots are fuel rods, control fuel rods, aluminum-clad dummies, Zircaloy-clad dummies, control dummies, slotted fuel rods, slotted dummies, thermocouple fuel assemblies, thermocouple dummies, half assemblies, three-quarter assemblies, and source assemblies. There is also a shielding assembly that is used to protect personnel from excessive radiation exposure during maintenance. All of these rod types with the exception of control rods have a 6-inch alignment pin fastened to the bottom. [1] A brief description of each of the types of rods used in these simulations is included below.

The fuel rod consists of three main segments. The bottom and top 2 feet of the rod consist of aluminum-clad graphite reflector regions. In between these regions is a 4-foot fuel region. [1] Figure A1.1 in Appendix 1 shows a schematic of the fuel rod.

The control fuel rod consists of a normal fuel rod with a vertical 3-inch diameter hole in the center through the entirety of the rod. The poison section of the control rod is raised and lowered within this hole to control reactor transients. The total length of the poison section is 5 feet. The control dummy rod is identical to the control fuel rod except that the fuel has been replaced with graphite. [1] A schematic of the control fuel rod can be seen in Figure A1.2 in Appendix 1. Only the control dummy rod is used in this simulation and is hereafter referred to simply as the control rod.

The aluminum-clad dummy is a solid graphite rod with aluminum cladding. Figure A1.3 in Appendix 1 shows a schematic of this rod type. The Zircaloy-clad dummy is a fuel rod in which the fuel region has been replaced with graphite. [1]

The slotted fuel rod is a fuel rod in which a 24-inch section of the fuel has been removed from the middle of the fuel section. Two non-adjacent sides of the cladding have also been removed so that there is a viewing slot through the center of the rod that can be used to visually observe objects in the center of the core. The slotted dummy rod is the same as the slotted fuel rod except the fuel has been replaced with graphite. Figure A1.4 in Appendix 1 shows a schematic of the slotted dummy rod. These rods come with 24- or 48-inch high slots. [1]

The final parts of the core are the base plate and the radial reflector. The base plate is a 79-inch square of 1-inch thick aluminum. It has countersunk holes drilled at 4-inch intervals in a 19x19 grid. These holes are used to hold the various types of rods in place. 32 of the holes are made larger and not countersunk. These are designed for the control rods. The control rod holes can be modified with an adapter that allows a fuel rod to be placed in that lattice position. The center of the base plate is a 5.625-inch square removable section that can be removed to allow for the use of large testing apparatus. The last part is the radial reflector. This section is made of graphite blocks and extends 2 feet from all sides of the reactor core except the top and the bottom. It covers a region from the bottom of the core to just below the top of the core. [2]

3. MODELING METHODS

The primary purpose of this project was to create a working model using Monte Carlo N-Particle Code (MCNP) Version 6.1 of all of the neutronically relevant parts of the TREAT reactor core. MCNP is a Monte Carlo-based radiation simulation software that predicts the behavior of various nuclear systems.

The parts that were determined to be neutronically relevant were the fuel rods, control rods, dummy rods, slotted rods, radial graphite reflector, bottom support plate, and surrounding air. Cement supporting structures, control rod drive systems, instrumentation systems, and many other objects that were well outside the core were not modeled. To create this model, two different modeling techniques were used: CAD modeling and constructive solid geometry modeling in MCNP. These will be discussed at length in Sections 3.1 and 3.2.

The model for the fuel rod was based on Figure A1.1 in Appendix 1. This drawing shows most of the dimensions needed to construct a fuel rod. However, a few simplifications and assumptions were made. All welds and rivets were ignored because they are a poorly defined in the drawing. Furthermore, the small amounts of steel and aluminum in these parts do not have an effect on the neutronic behavior of the core. The thickness of each type of cladding material was assumed to be constant on all sides of the rod. This is most notable on the chamfers on the corners of the rod where the cladding thickness is unlabeled. The gas gap between cladding and fuel (or graphite) was also assumed to be constant on all sides. This is most notable on the chamfers at the corners of the

fuel where the chamfer size is not listed. The fuel can outgas tube was also ignored due to its lack of specific dimensions and very small estimated size. There are several other assumptions made only in one of the two modeling methods. These assumptions will be discussed in the appropriate section for that modeling method (Section 3.1 for CAD modeling or 3.2 for MCNP constructive solid geometry modeling).

The other types of rods listed in Figure 3.1 were created using the shapes and sizes of the fuel rod wherever possible. The outer cladding was assumed to be the same shape as the fuel rod. However, the center portion of the cladding, which is Zircaloy-2 in the fuel rod, was assumed to be aluminum in non-fuel rods. The zirconium spacer plates and horizontal aluminum cladding sections between segments were also removed from the non-fuel rods; the fuel section of the rod was also replaced with graphite in these rods. The slot on the slotted rods was assumed to be centered axially on the fuel section and exactly 2 feet high. In the control rod, the center cylinder of poison material was assumed to be the same diameter as the control rod holes in the base plate (3 inches).

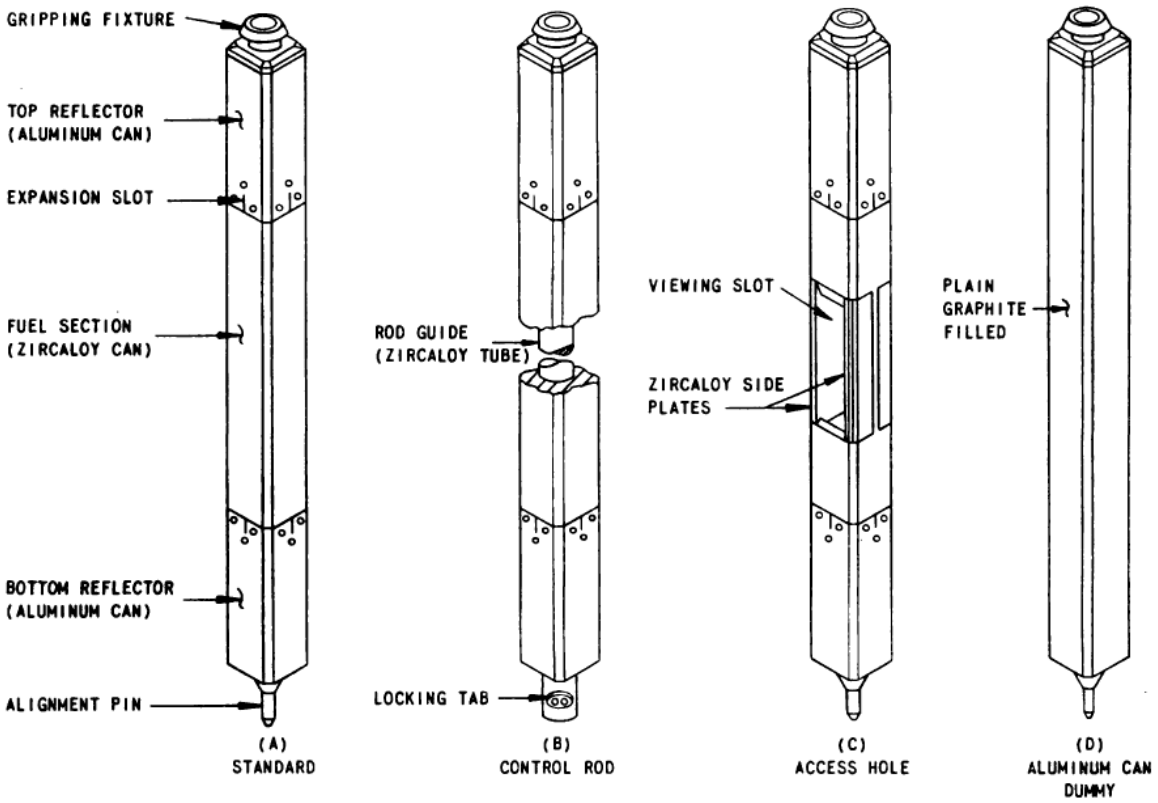

Figure 3.1: Basic drawing of the four major types of rod [2]

The levelling screw holes, alignment slots, and coolant bypasses in the base plate were ignored.

The core configuration used in the simulations performed was the 'M8CAL' configuration. This configuration is shown in Figure 3.2. It includes 318 fuels rods, 13 aluminum dummy rods, 10 slotted dummy rods, and 20 dummy control rods. This core configuration is taken from a calibration experiment performed when the TREAT was still operational. There is significant data available pertaining to this core configuration that can be used as a point of comparison for creating models of the TREAT core. [3]

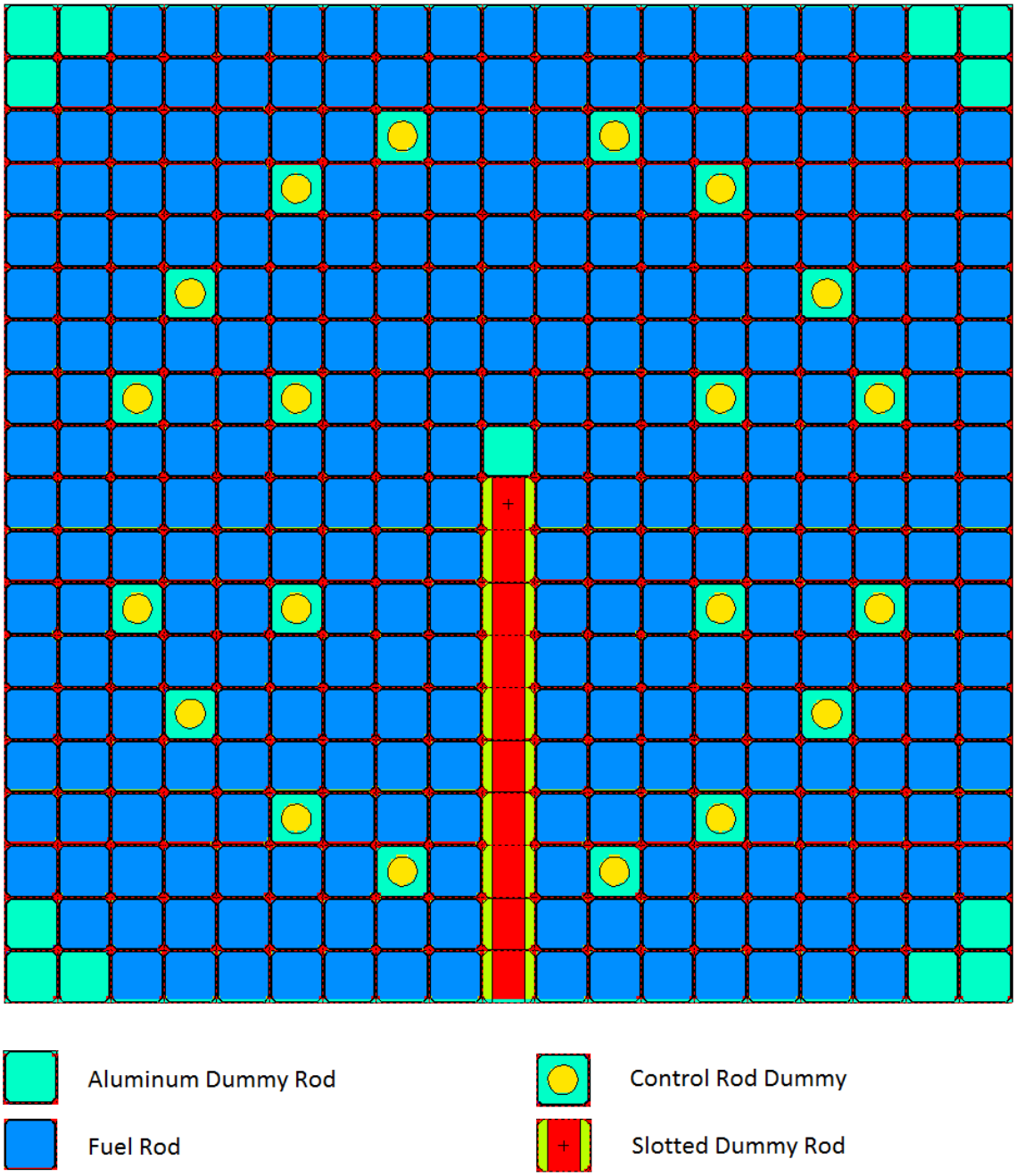

Figure 3.2: The M8CAL core configuration

3.1 CAD Modeling

The first method used to model the TREAT reactor was CAD modeling. Several of the types of rods, as well as the reactor base plate were created. Originally, these CAD models were intended to be used to create a mesh model

of the core in MCNP. However, this proved not to be a feasible strategy for several reasons. First, for the usage of the mesh model to be efficient in terms of user input, each type of rod needed to be able to be put into MCNP individually, then replicated across the core using lattices. MCNP 6.1 cannot use multiple meshes in a single simulation. It also cannot use a mesh within a lattice.

The only other way to use these CAD models with MCNP would be to directly import the model of the entire core all at once. This presents several problems. First, there are thousands of parts in the core, each of which would need to be assigned a material and density individually. Second, each time the core was modified, a new CAD model would have to be created from the component parts. While this step would not take much time by itself, it would require that the core be put back into MCNP as a new mesh object, and the process of assigning materials would have to be repeated. For these reasons, the CAD models of the core were used only as visual models.

There were several additional assumptions made in the making of the CAD models. First, the chamfers on the alignment pins and gripping fixtures on the fuel rods were given estimated dimensions based on Figure A1.1 in Appendix 1. The alignment pin slots were given an estimated depth and slope based on Figure 3.3.

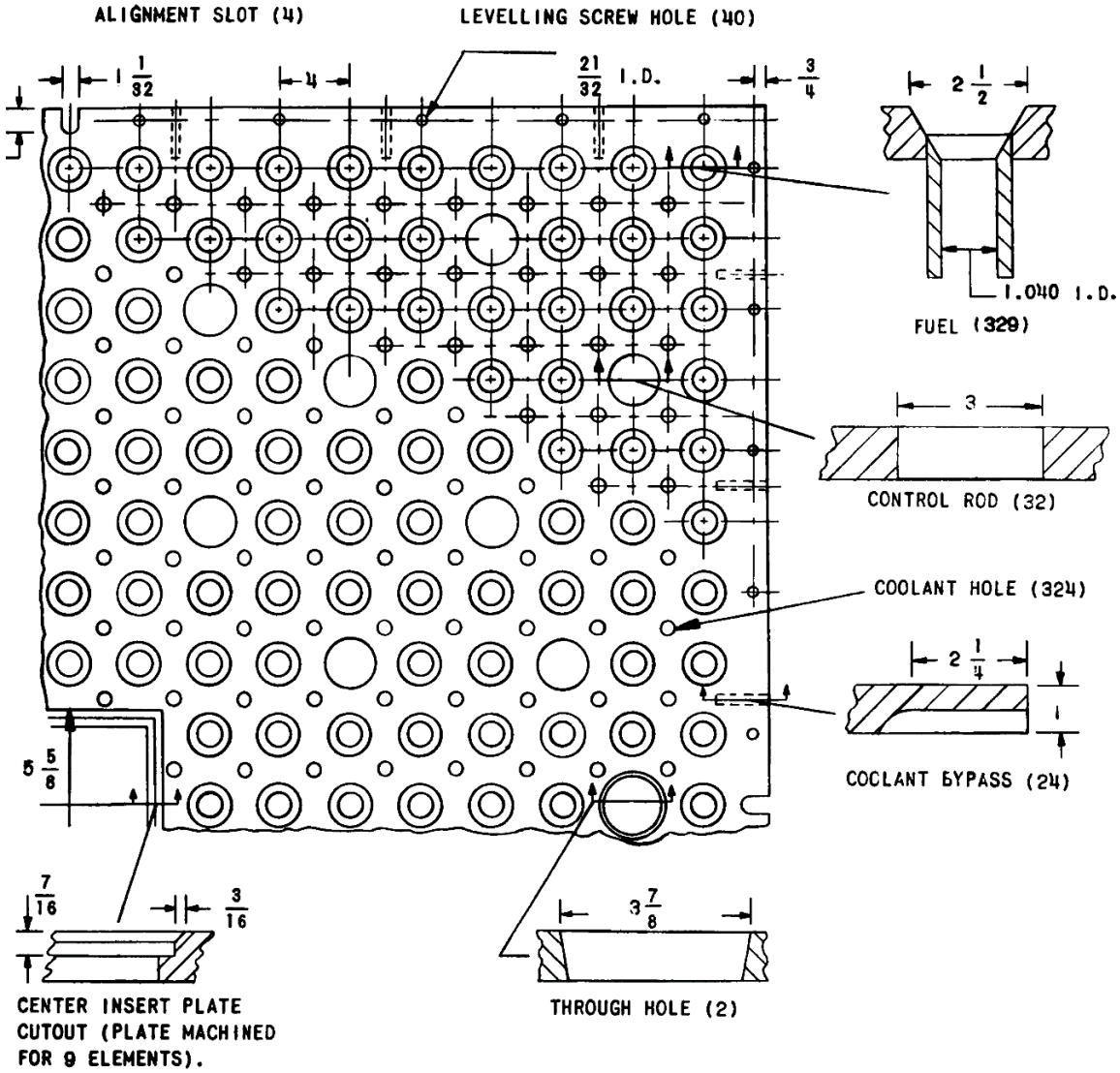

Figure 3.3: Drawing of one quarter of the base plate [2]

The center insert plate cutout was assumed to be a rectangular prism when it is realistically larger on the top side by a small amount. Because the CAD model was used as a strictly visual representation, nothing beyond the core and the base plate of the core were modeled. Figures A2.1 through A2.3 in Appendix 2 show CAD drawings for an individual fuel rod, the base plate, and the entire core.

3.2 MCNP Modeling

The second method used to create the simulation model was MCNP constructive solid geometry. Constructive solid geometry is a method that uses three-dimensional geometric shapes or Cartesian planes in combination with Boolean operators to create complex geometric shapes. [4] Another notable feature in MCNP is the ability to replicate an object that has already been created multiple times in a rectangular or hexagonal lattice structure. This feature was used to create the fuel lattice in the reactor core. In this way, each type of fuel rod could be created, then replicated any number of times (or not at all) throughout the core. This allows the user to easily and quickly adjust the core to the desired configuration of rods. The version of MCNP used for this simulation was MCNP 6.1.

There were several assumptions made in the making of the MCNP model. First, the holes in the base plate were ignored. Likewise, the alignment pins in the bottoms of the rods were also removed. Since the alignment pins were designed to fill the holes in the base plate and the two parts are made of the same material, this should have negligible effect on the behavior of the core. The aluminum gripping fixture at the top of the core was replaced with a solid aluminum cap of the same height with the same outer shape as the fuel cladding. When any portion of the control rods are removed beyond the bottom of the core, they are ignored, as they are 2 feet away from any fuel at this point. Density and composition information for the parts made of Aluminum 6063, Zircaloy-3, graphite, and boron carbide was taken from Reference [1].

The on-the-fly Doppler broadening feature available in MCNP 6.1 was used to create an accurate temperature profile in the fuel segments of the reactor core. For the axial temperature profile, each fuel section was broken up into 12 4-inch segments. Figure 3.4 shows a previously calculated graph of the axial power distribution. This graph gives two important features of the core temperature distribution. First, the average temperature has little effect on power distribution. Second, the power distribution follows a sinusoidal shape. A maximum temperature of 600 °F was used as that is the maximum allowable temperature in the core [5]. In this graph, the x-axis represents the axial position relative to the bottom of the fuel rods. The y-axis represents the power density as calculated by a Monte Carlo-based reactor burnup code called Serpent 2.

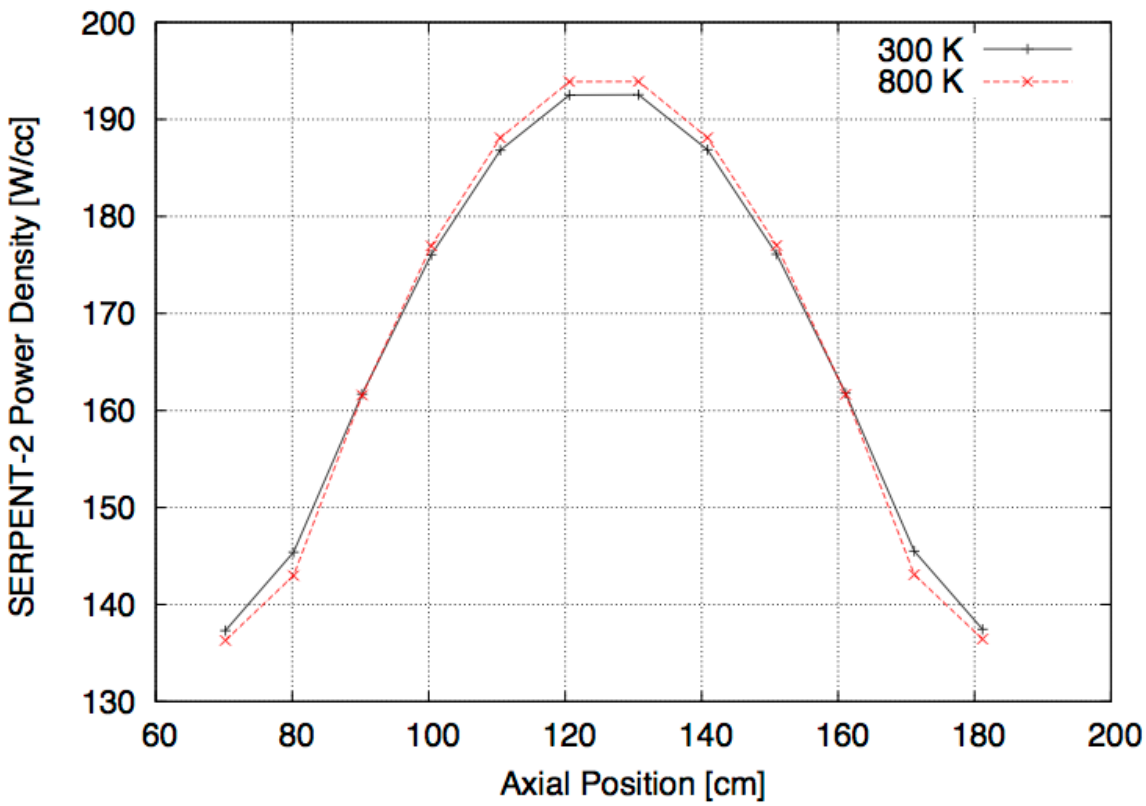

Figure 3.4: The axial power density profile of the M8CAL core [6]

The radial temperature profile was created using Figure 3.5. This shows the hottest regions in red, the slightly less hot regions in yellow, and the coolest regions in green.

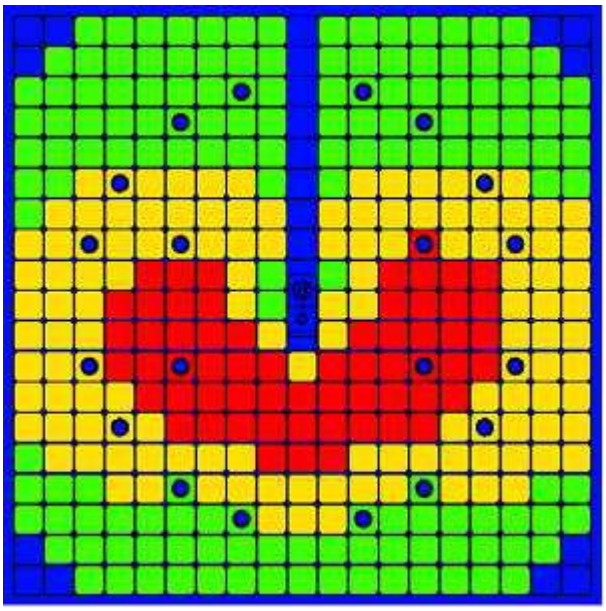

Figure 3.5: Radial temperature distribution of the M8CAL core [3]

Figure 3.6 shows the estimated temperature distribution in the core of the reactor based on the two profiles shown above. The y-axis in this graph is the temperature of the fuel in Fahrenheit. The x-axis is the height at which the temperature is being measured. The top line is the hot rods, the middle line is the medium rods, and the bottom line is the relatively cold rods. This color scheme matches Figure 3.5.

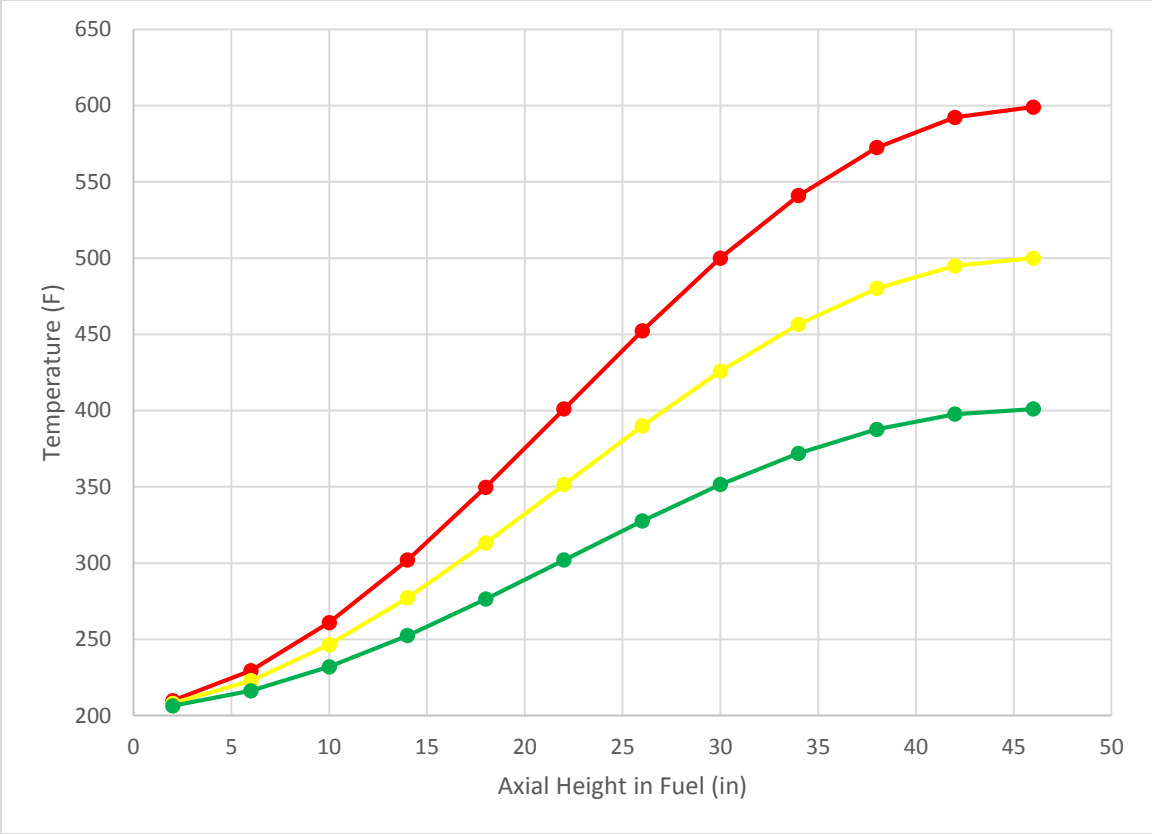

Figure 3.6: Axial temperature distribution in each of the temperature zones

Note that this is an assumed temperature scheme. The actual temperature scheme will vary with reactor power, core configuration, coolant flow rates, and control rod groupings (having different control rod heights in the same core will cause this distribution to shift).

The radial reflector around the core was assumed to extend from the bottom of the fuel rods to a point roughly 7 centimeters from the top of the fuel rods. This parameter is approximated based on the relative size of the reflector in Figure 3.7.

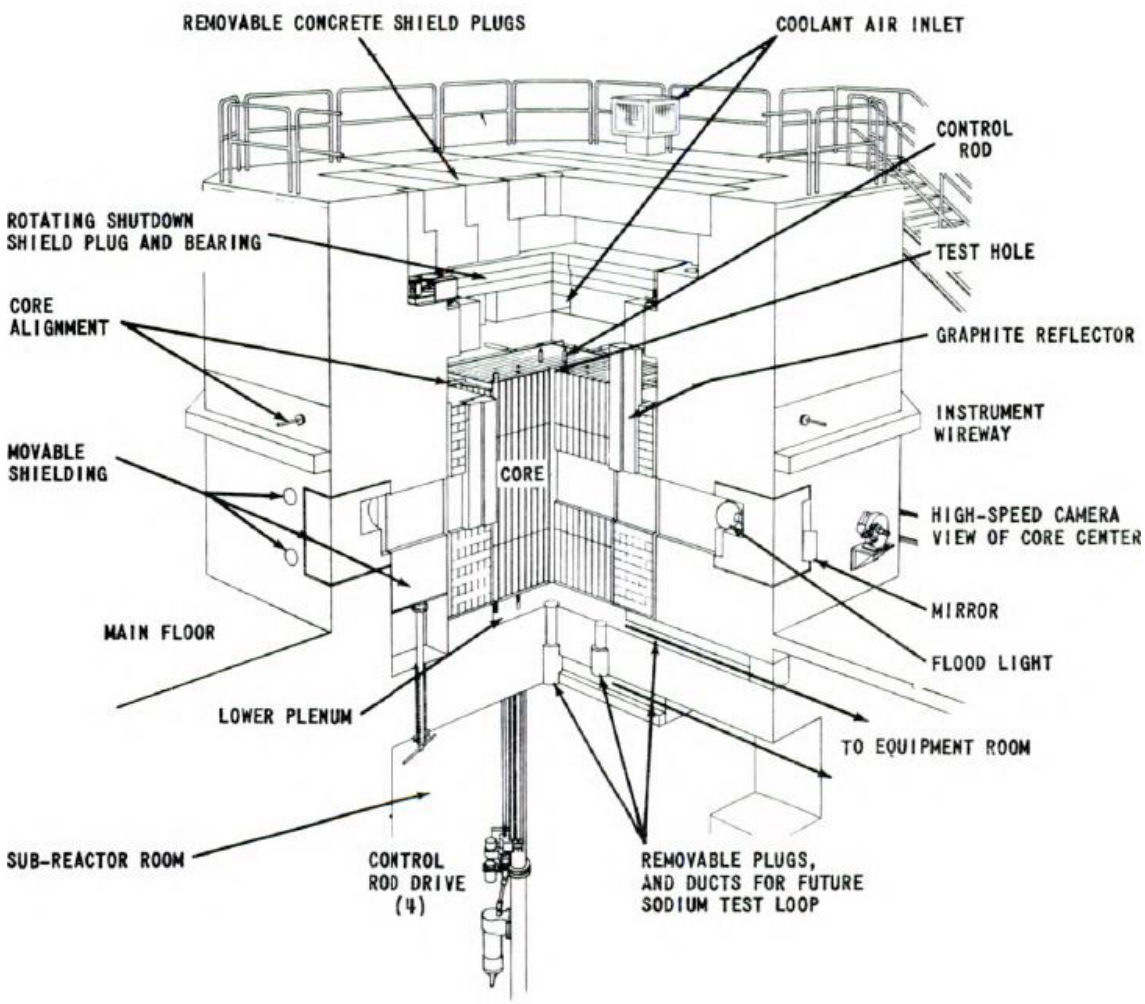

Figure 3.7: Drawing of the reactor core and its immediate surroundings [2]

All surrounding structures outside the core were ignored. The reason that these parts were ignored is that there are no significant quantities of materials capable of scattering neutrons back toward the core. The core with base plate and reflector was therefore placed in a vacuum.

4. NEUTRONICS ANALYSIS

The ultimate purpose of this project was to create a model that could make useful predictions about the behavior of the TREAT core. There are three quantities calculated in this report. These quantities are neutron flux, delayed neutron fraction, and mean neutron generation time.

4.1 Neutron Flux

Neutron flux is the quantity of neutrons passing through a unit area per unit time. It can also be expressed as the total energy of the neutrons passing through this unit area per unit time. [7] This quantity is extremely important in nuclear reactors. Power density in any specific region of a reactor is directly proportional to the neutron flux. As power density in a region increases, so does the temperature. This relationship makes neutron flux an important quantity in finding potential hotspots and points of failure in a reactor. [8] A flux profile is a series of flux measurements taken at a group of locations within the reactor that give a general idea of trends in the flux throughout the reactor.

Data was collected for both total neutron flux and neutron flux in discrete energy groups. These groups were 0-2 eV, 2-9 eV, 9 eV-1 keV, and >1 keV. Only the data for total neutron flux is included in this section. Figures with individual group neutron fluxes can be found in Appendix 3 along with the tabulated raw data used to make these figures. It should also be noted that MCNP measures flux in terms of number of neutrons passing through a given area per source particle, rather than per unit time. Actual time-averaged flux will vary depending on the power level of the reactor.

4.1.1 Radial Flux Profile

The radial flux profile is a profile taken in the horizontal direction across the reactor. In this case, the flux was measured along the line shown in Figure 4.1. The black line represents the fuel elements in which the profile was measured. The flux was measured at the axial center of each rod.

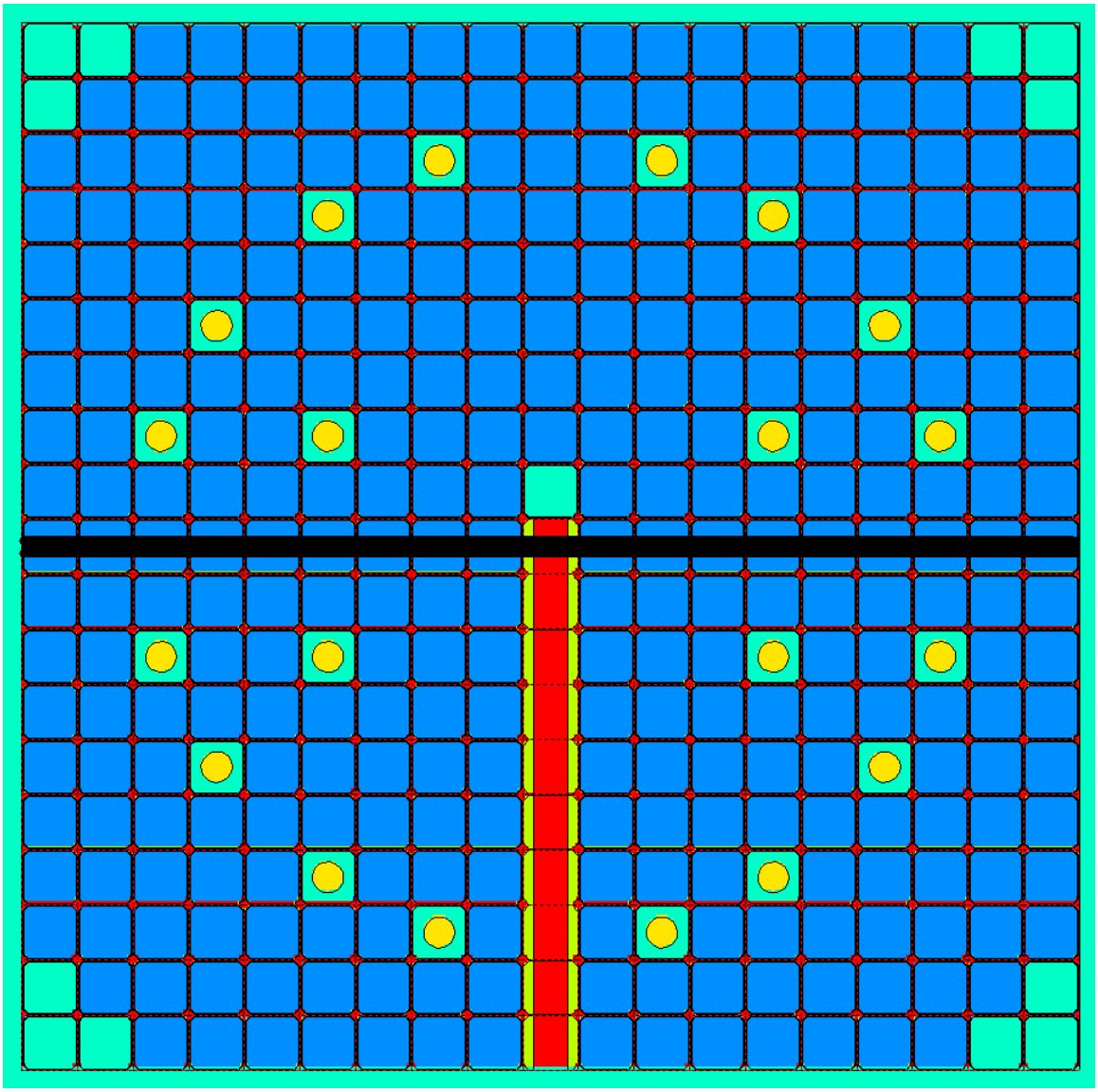

Figure 4.1: Drawing showing the line on which the radial flux profile was measured

Figure 4.2 shows the radial profile calculated by MCNP. The x-axis in this plot represents the x-coordinate of the rod being measured. The center of the core is at x-coordinate 0 (there is no fuel here for this configuration), while the rods on the edges of the core are at x-coordinates -9 and 9.

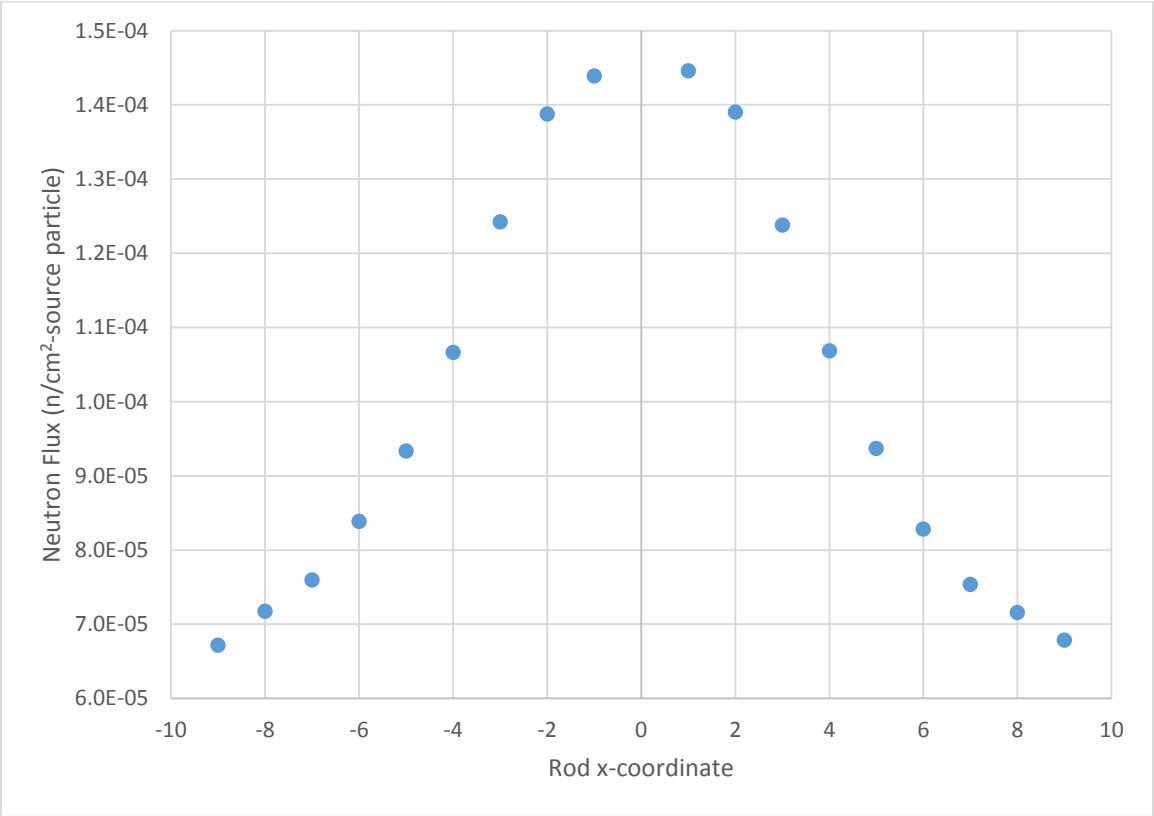

Figure 4.2: Total flux profile along the centerline in the radial direction

4.1.2 Axial Flux Profile

The axial profile of the reactor was measured at 4-inch intervals along the fuel rod at the location highlighted in black in Figure 4.3.

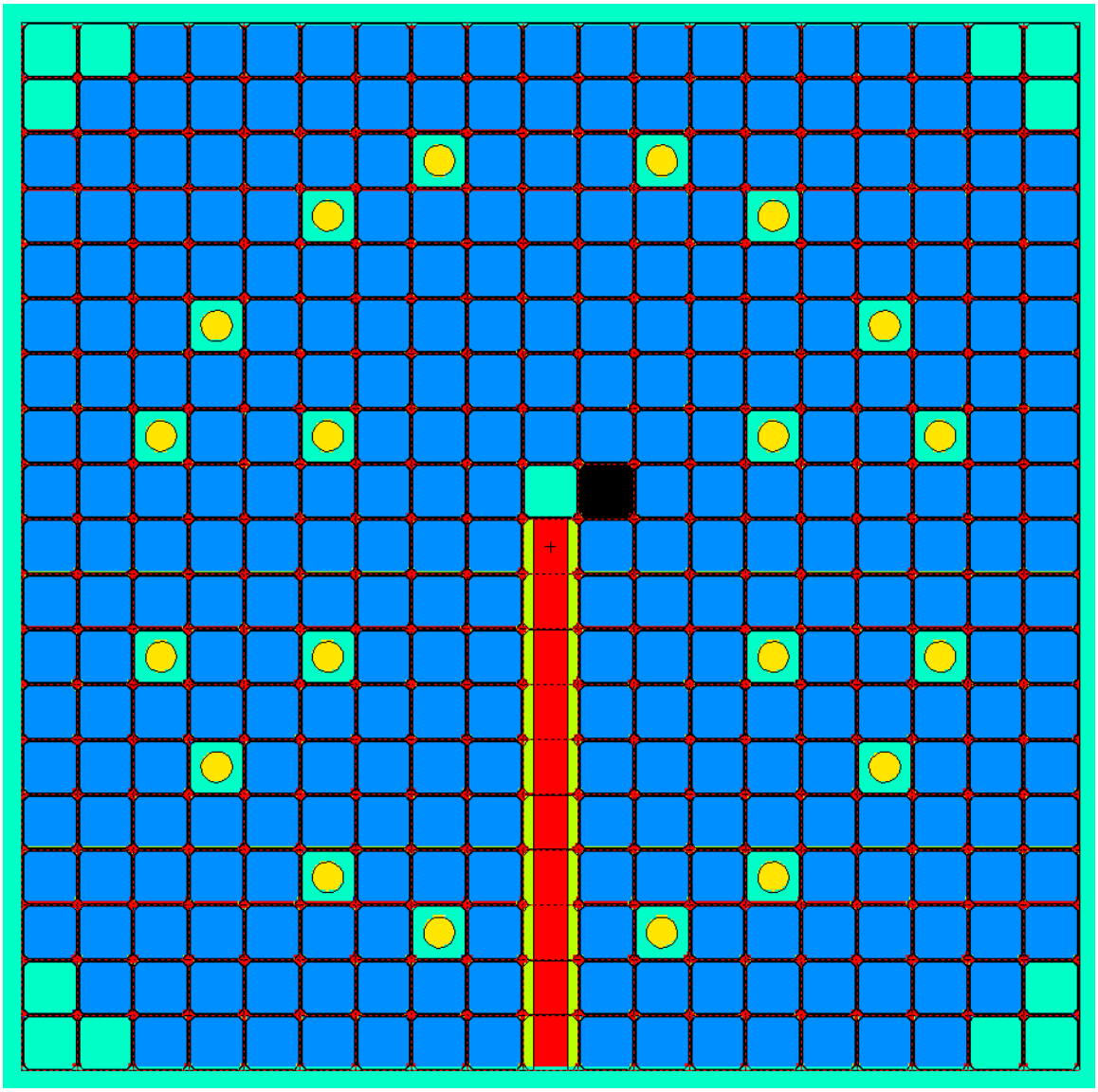

Figure 4.3: Diagram showing the rod in which the axial profile was measured

Figure 4.4 shows the axial profile of this rod. The x-axis represents the axial centerline of the piece of fuel being measured relative to the bottom of the fuel section of the rod.

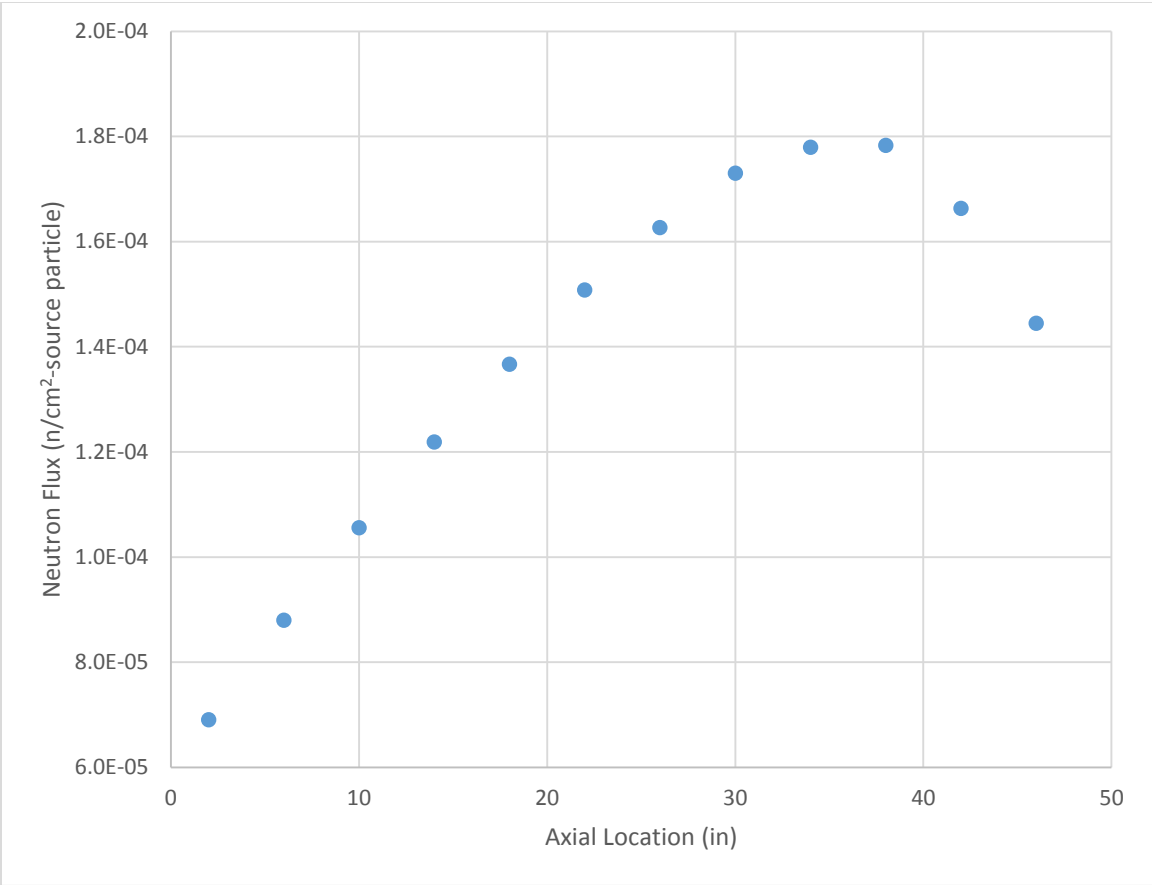

Figure 4.4: Axial total flux profile of selected rod

4.1.3 Flux in Reflector Regions

The flux in the reflector regions above and below the fuel, as well as in the 2-foot thick radial reflector was also measured. Table 4.1 shows the fluxes in these regions.

Table 4.1: Total flux in the reflector regions

Region	Total	Neutron Group Energy			
		0-2eV	2-9eV	9eV-1keV	>1keV
	Neutron Flux (n/cm2-source particle)				
Above Fuel	3.71571E-05	2.88968E-05	2.45107E-06	2.45038E-06	3.35893E-06
Below Fuel	9.59439E-06	7.12587E-06	3.09291E-07	8.96291E-07	1.26294E-06
Radial Reflector	1.25660E-05	1.10417E-05	2.01400E-07	5.56657E-07	7.66214E-07

4.2 Delayed Neutron Fraction

In a nuclear reactor, the vast majority of neutrons are released very quickly (within 10^{-14} seconds) after a fission event occurs. These are called prompt neutrons. However, a small portion of neutrons is released a relatively significant period of time after these prompt neutrons. These are called delayed neutrons; they play a significant role in the control of fission reactions in the core. The ratio of the number of delayed neutrons produced in the core to the total number of neutrons produced is called the delayed neutron fraction (β_{eff}). This quantity is important when calculating important reactor parameters including reactivity and reactor period. It also forms the basis of one of the most commonly used 'unit' of reactivity, the dollar ($). [9]

The actual value of β_{eff} is difficult to measure using experimental methods. As such, calculations are performed in many situations, often involving simulation methods such as MCNP. The most common method for calculating β_{eff} using MCNP is called the prompt method. This method uses Equation 4.1.

$$\beta_{eff} = \frac{k - k_p}{k} \tag{4.1}$$

In this equation, k is the multiplication factor of the core under normal circumstances with both prompt and delayed neutrons. The variable k_p represents the multiplication factor of a core that contains no delayed neutrons. [10] Both of these quantities can be calculated using MCNP 6.1. While this methods makes use of some assumptions that make it somewhat inaccurate, these inaccuracies are often considered to be insignificant. [11]

The value for β_{eff} that was calculated for the M8CAL TREAT core was 0.00642±0.00052. This compares to a calculated value of 0.00698±0.00005 and an experimentally reported value of 0.0072±0.0005 according to [3]. This value is quite different from other simulations of the TREAT. There are multiple likely explanations for this discrepancy. These will be discussed in Section 4.4.

4.3 Mean Neutron Generation Time

The mean neutron generation time is the average amount of time as measured in seconds that a neutron spends in the core before it causes another fission. This quantity is vital in reactor operation as it heavily influences the period of the reactor. [12] Mean neutron generation time is normally difficult to determine, but MCNP includes the prompt neutron lifetime in the output. [10] The prompt neutron lifetime can be related to the mean neutron generation time by Equation 4.2.

$$\Lambda = \frac{l_p}{k} \tag{4.2}$$

In this equation, Λ is the mean neutron generation time, l_p is the prompt neutron lifetime, and k is the multiplication factor. [12]

Using this method, the mean neutron generation time of the M8CAL core was 1.4318±0.0009 milliseconds. The reported experimental value for this quantity is 900±30 microseconds; the value acquired in another simulation was 869±1 microseconds. [3] As with the delayed neutron fraction, the simulated value is significantly different from the previously predicted and experimental values.

4.4 Discrepancies in Λ and β_{eff}

First, this simulation assumes that the graphite in the core is pure. Realistically, the graphitization of carbon in the core is only 59%. [1] However, MCNP has no way to model partial graphitization, only complete graphitization. Furthermore, small parts in the core that were modeled may have some effect on results. When summed together, these effects are potentially significant. Also, small chemical impurities present in the components of the core may have all contributed to the different results. Finally, the assume temperature profile may not match the profile exhibited during the experiements.

5. CONCLUSIONS

The working model of the TREAT reactor core was created and utilized to produce useful information on the core's behavior. The flux profiles were mapped and closely follow the theoretical flux shapes of a homogenous core.

The delayed neutron fraction and mean neutron generation time were calculated to be outside the error bounds of the values measured in experiments. However, while this model does not accurately predict these factors, it still makes useful predictions of the flux shape, allowing for prediction of thermal profiles, hotspots, and high-radiation locations.

6. REFERENCES

[1] J. D. Bess and M. D. DeHart, ”Baseline Assessment of TREAT for Modeling and Analysis Needs,” Idaho National Laboratory, Idaho Falls, ID, Rep. INL/EXT-15-35372, October 2015.

[2] G. A. Freund *et al*., “Design Summary Report on the Transient Reactor Test Facility,” Argonne National Laboratory, Argonne, IL, Rep. ANL-6034, June 1960.

[3] D. C. Kontogeorgakos *et al*., “Temperature Limited Transient Calculations for the Transient Reactor Test Facility (TREAT) using MCNP and the Point Kinetics Code TREKIN,” Argonne National Laboratory, Argonne, IL, 2015.

[4] C. Segura *et al*., “Constructive Solid Geometry Using BSP Tree,” Carnegie Mellon University, Pittsburgh, PA, Rep. 24-681, 2013.

[5] W. R. Robinson *et al*., “TREAT NPR Calibration Experiment AN-CAL,” Argonne National Laboratory, Argonne, IL, ANL/NPR-92/11, September 1992.

[6] J. Ortensi *et al*., “Full Core TREAT Kinetics Demonstration Using Rattlesnake/BISON Coupling Within MAMMOTH,” Idaho National Laboratory, Idaho Falls, ID, INL/EXT-15-36268, August 2015.

[7] J. J. Duderstadt and L. J. Hamilton, “Neutron Transport,” in *Nuclear Reactor Analysis,* 1st ed. Malden, MA: John Wiley & Sons, 1976, ch. 4, sec. 1, pp 106.

[8] J. J. Duderstadt and L. J. Hamilton, “The One-Speed Diffusion Theory Model,” in *Nuclear Reactor Analysis,* 1st ed. Malden, MA: John Wiley & Sons, 1976, ch. 5, sec. 3, pp 206.

[9] J. J. Duderstadt and L. J. Hamilton, “The Nuclear Physics of Fission Chain Reactions,” in *Nuclear Reactor Analysis,* 1st ed. Malden, MA: John Wiley & Sons, 1976, ch. 2, sec. 2, pp 61-63.

[10] L. Snoj *et al*., “Calculation of Kinetic Parameters of TRIGA Reactor,” in *4th World TRIGA Users Conf.*, Lyon, France, 2008, pp 1-3.

[11] R. K. Meulekamp and S. C. van der Marck, “Calculating the Effective Delayed Neutron Fraction with Monte Carlo,” *Nucl. Sci. and Eng.*, vol. 152, pp 144-145, Feb. 2006.

[12] J. J. Duderstadt and L. J. Hamilton, “Nuclear Reactor Kinetics,” in *Nuclear Reactor Analysis,* 1st ed. Malden, MA: John Wiley & Sons, 1976, ch. 6, sec. 1-2, pp 238-243.

7. APPENDIX

Appendix 1 Rod Drawings

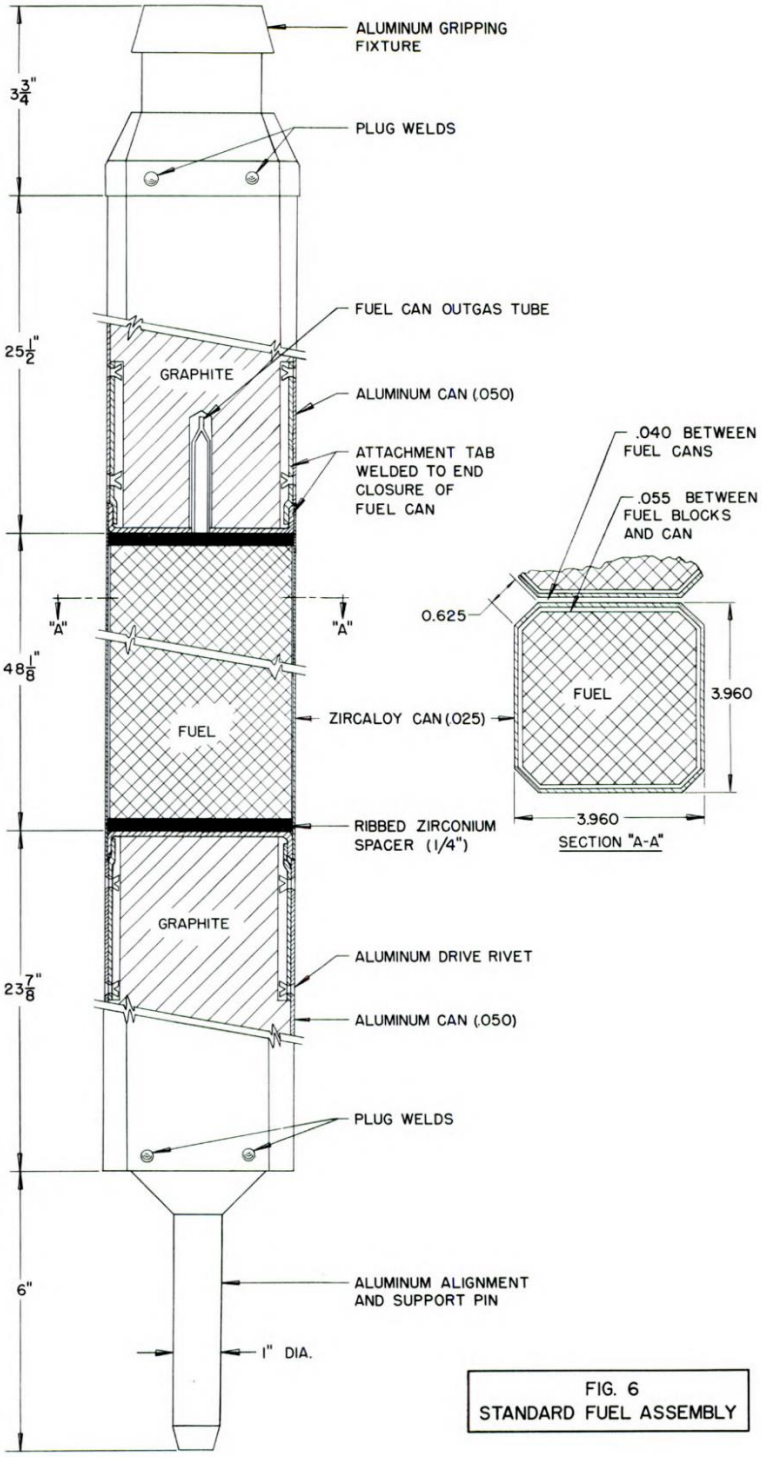

Figure A1.1: Drawing of a fuel rod [2]

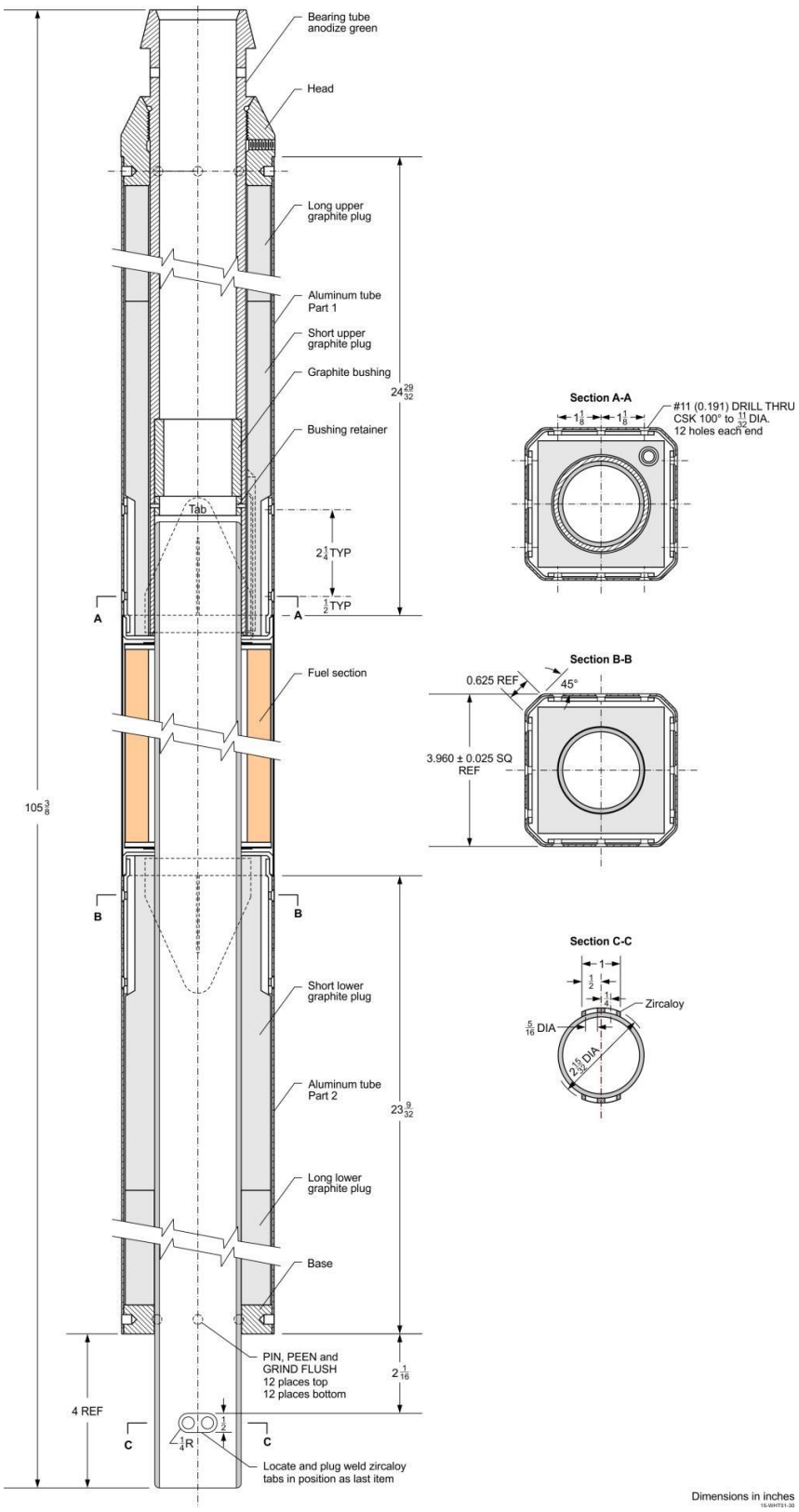

Figure A1.2: Drawing of a control fuel rod [1]

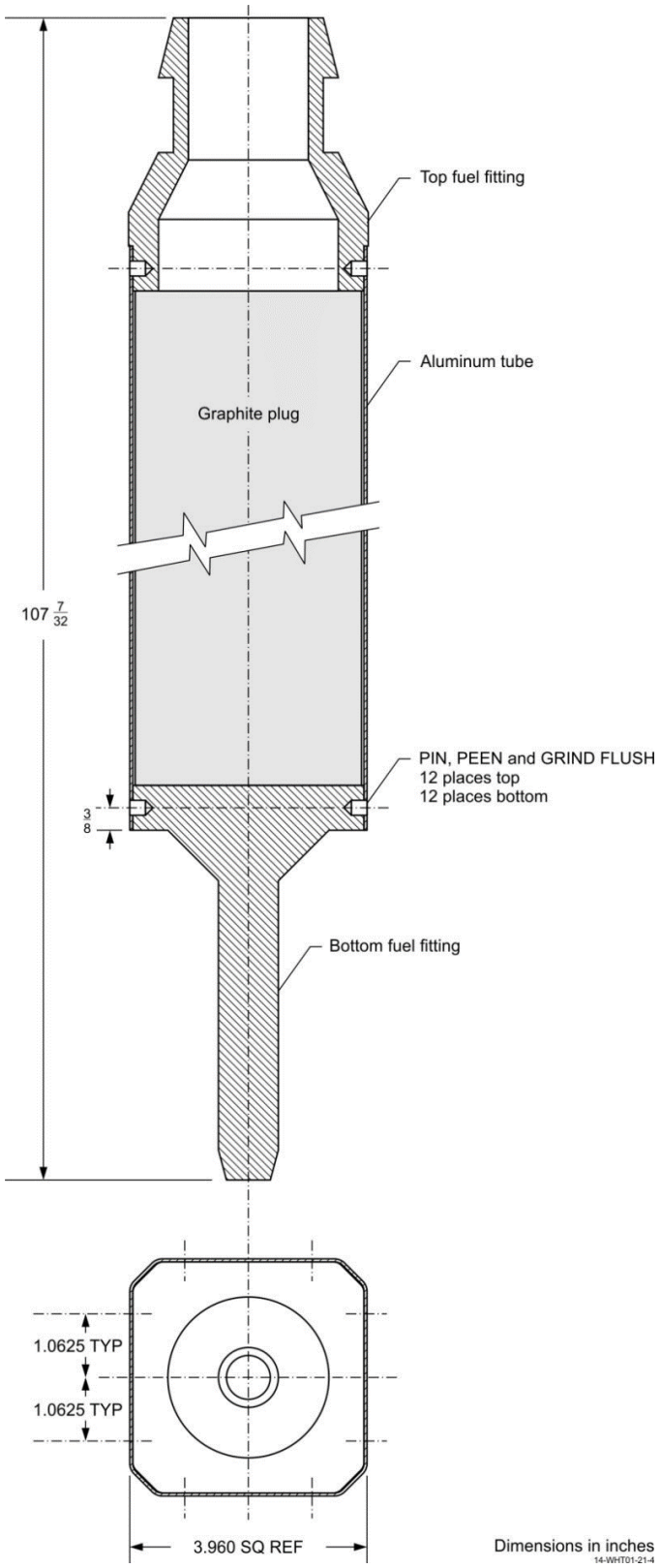

Figure A1.3: Drawing of an aluminum-clad dummy rod [1]

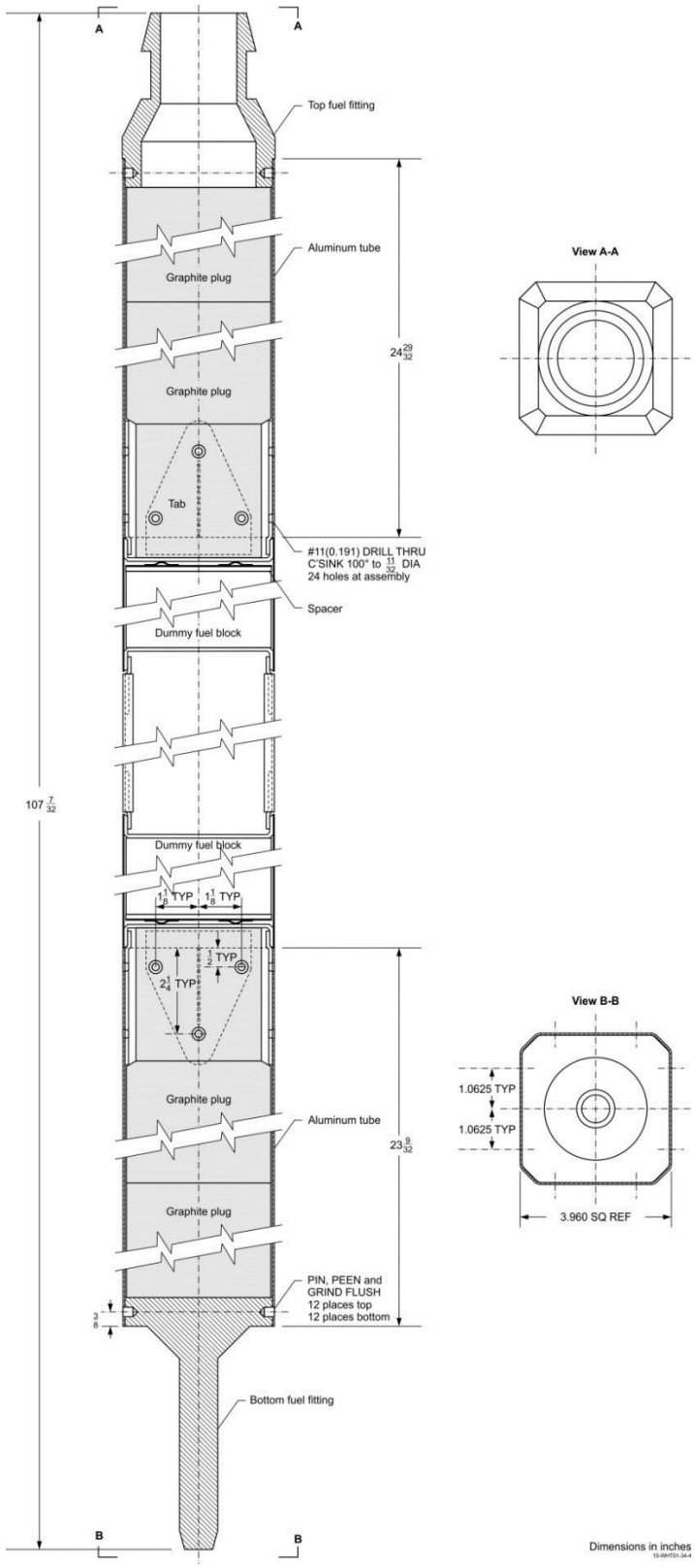

Figure A1.4: Drawing of a slotted dummy rod [1]

Appendix 2 CAD Models

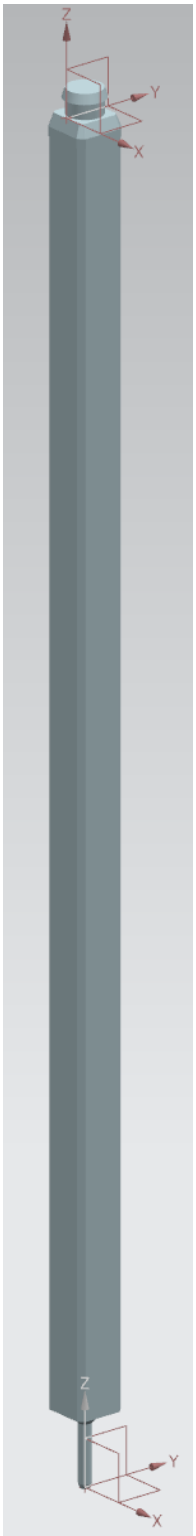

Figure A2.1: A CAD model of a fuel rod

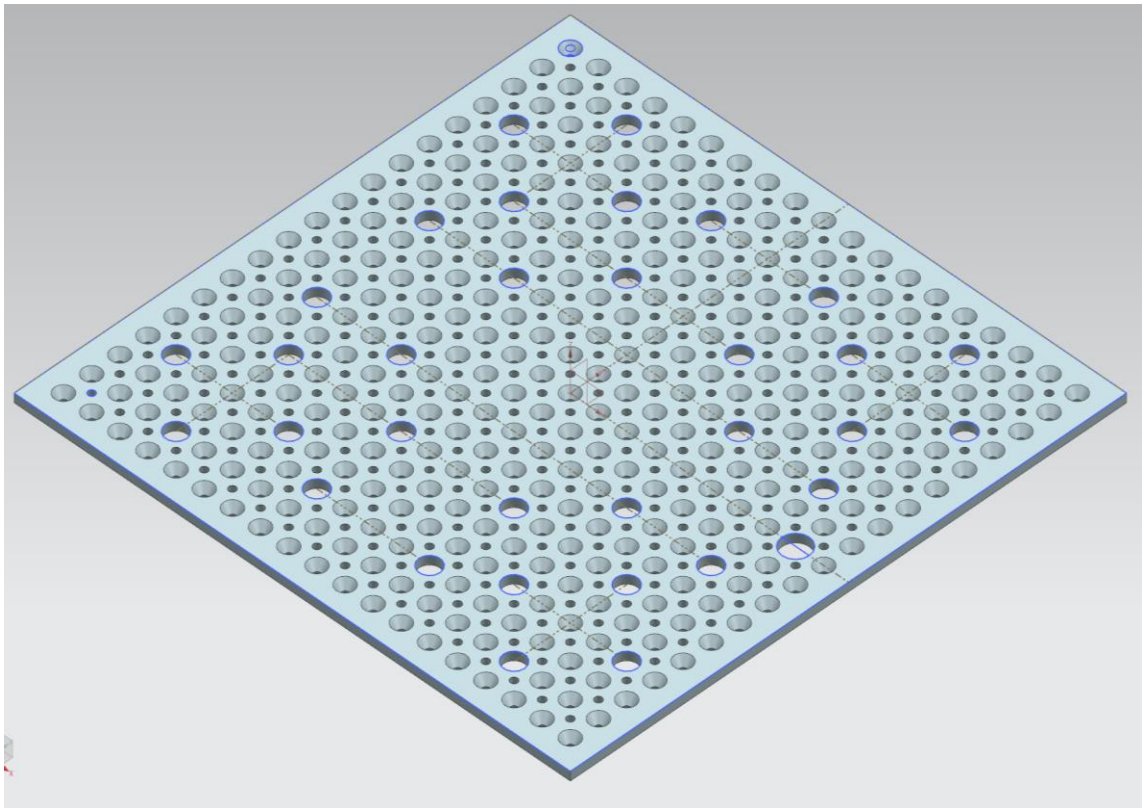

Figure A2.2: CAD model of the base plate

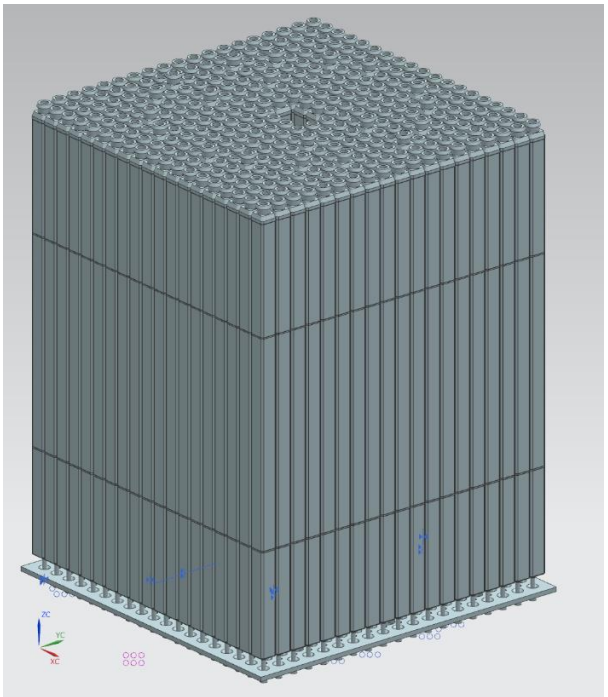

Figure A2.3: CAD model of the full core

Appendix 3 Additional Neutron Flux Data

Table A3.1: Radial neutron flux profiles by energy group

		Neutron Group Energy			
	Total	0-2eV	2-9eV	9eV-1keV	>1keV
x-coordinate	Neutron Flux (n/cm2-source particle)				
-9	6.71776E-05	3.45E-05	2.83E-06	8.94E-06	2.09E-05
-8	7.17336E-05	3.18E-05	3.28E-06	1.12E-05	2.55E-05
-7	7.59538E-05	3.21E-05	3.58E-06	1.21E-05	2.82E-05
-6	8.38621E-05	3.48E-05	4.21E-06	1.42E-05	3.07E-05
-5	9.33342E-05	3.93E-05	4.66E-06	1.56E-05	3.38E-05
-4	1.06615E-04	4.43E-05	5.34E-06	1.82E-05	3.87E-05
-3	1.24247E-04	5.24E-05	6.16E-06	2.11E-05	4.46E-05
-2	1.38772E-04	5.91E-05	6.74E-06	2.30E-05	5.00E-05
-1	1.43884E-04	6.21E-05	7.06E-06	2.35E-05	5.12E-05
1	1.44591E-04	6.30E-05	7.19E-06	2.35E-05	5.09E-05
2	1.39017E-04	5.92E-05	6.84E-06	2.27E-05	5.02E-05
3	1.23799E-04	5.21E-05	6.13E-06	2.05E-05	4.51E-05
4	1.06856E-04	4.49E-05	5.22E-06	1.80E-05	3.88E-05
5	9.36907E-05	3.95E-05	4.79E-06	1.58E-05	3.36E-05
6	8.28353E-05	3.46E-05	4.01E-06	1.42E-05	3.01E-05
7	7.53549E-05	3.20E-05	3.51E-06	1.22E-05	2.76E-05
8	7.15631E-05	3.19E-05	3.07E-06	1.09E-05	2.57E-05
9	6.78766E-05	3.48E-05	2.78E-06	8.91E-06	2.14E-05

Table A3.2: Axial neutron flux profiles by energy group

Axial Location (in)	Total	Neutron Group Energy			
		0-2eV	2-9eV	9eV-1keV	>1keV
	Neutron Flux (n/cm2-source particle)				
2	6.90238E-05	3.32E-05	3.13E-06	1.00E-05	2.27E-05
6	8.79653E-05	3.88E-05	4.21E-06	1.41E-05	3.09E-05
10	1.05576E-04	4.56E-05	5.18E-06	1.74E-05	3.74E-05
14	1.21910E-04	5.37E-05	6.19E-06	1.96E-05	4.25E-05
18	1.36672E-04	6.00E-05	6.91E-06	2.20E-05	4.77E-05
22	1.50780E-04	6.72E-05	7.49E-06	2.44E-05	5.18E-05
26	1.62637E-04	7.29E-05	8.15E-06	2.61E-05	5.55E-05
30	1.73020E-04	7.84E-05	8.36E-06	2.79E-05	5.84E-05
34	1.77932E-04	8.05E-05	8.58E-06	2.82E-05	6.07E-05
38	1.78333E-04	8.22E-05	8.50E-06	2.72E-05	6.05E-05
42	1.66339E-04	7.97E-05	7.39E-06	2.41E-05	5.51E-05
46	1.44495E-04	7.62E-05	5.91E-06	1.95E-05	4.29E-05

Table A3.3: Neutron flux in reflector regions by energy group

Region	Total Flux	Neutron Group Energy			
		0-2eV	2-9eV	9eV-1keV	>1keV
	Neutron Flux (n/cm2-source particle)				
Above Fuel	3.71571E-05	2.88968E-05	2.45107E-06	2.45038E-06	3.35893E-06
Below Fuel	9.59439E-06	7.12587E-06	3.09291E-07	8.96291E-07	1.26294E-06
Radial Reflector	1.25660E-05	1.10417E-05	2.01400E-07	5.56657E-07	7.66214E-07

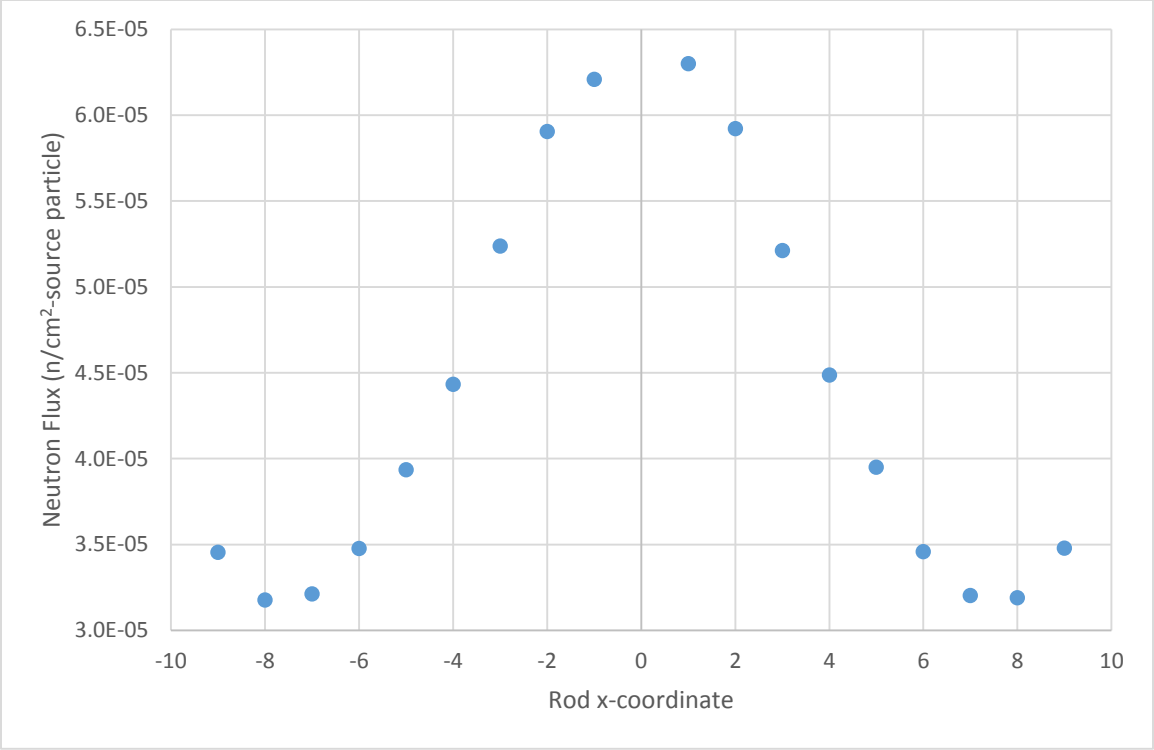

Figure A3.1: Radial neutron flux profile for 0-2eV

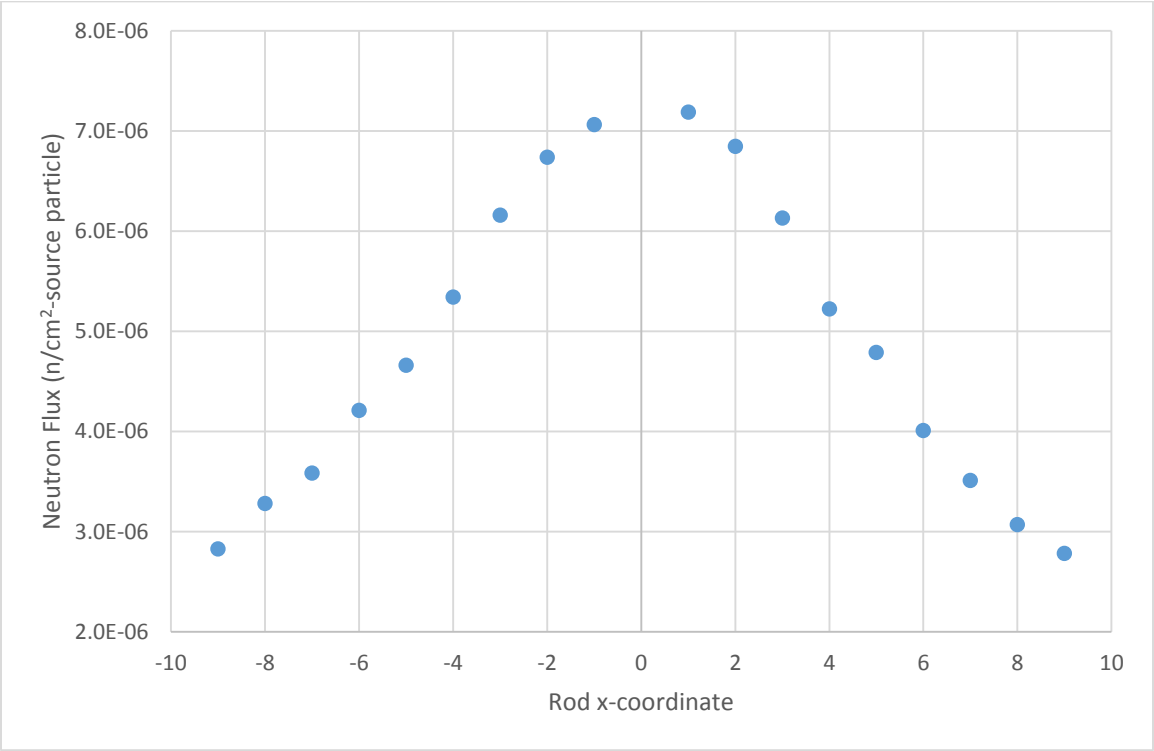

Figure A3.2: Radial neutron flux profile for 2-9eV

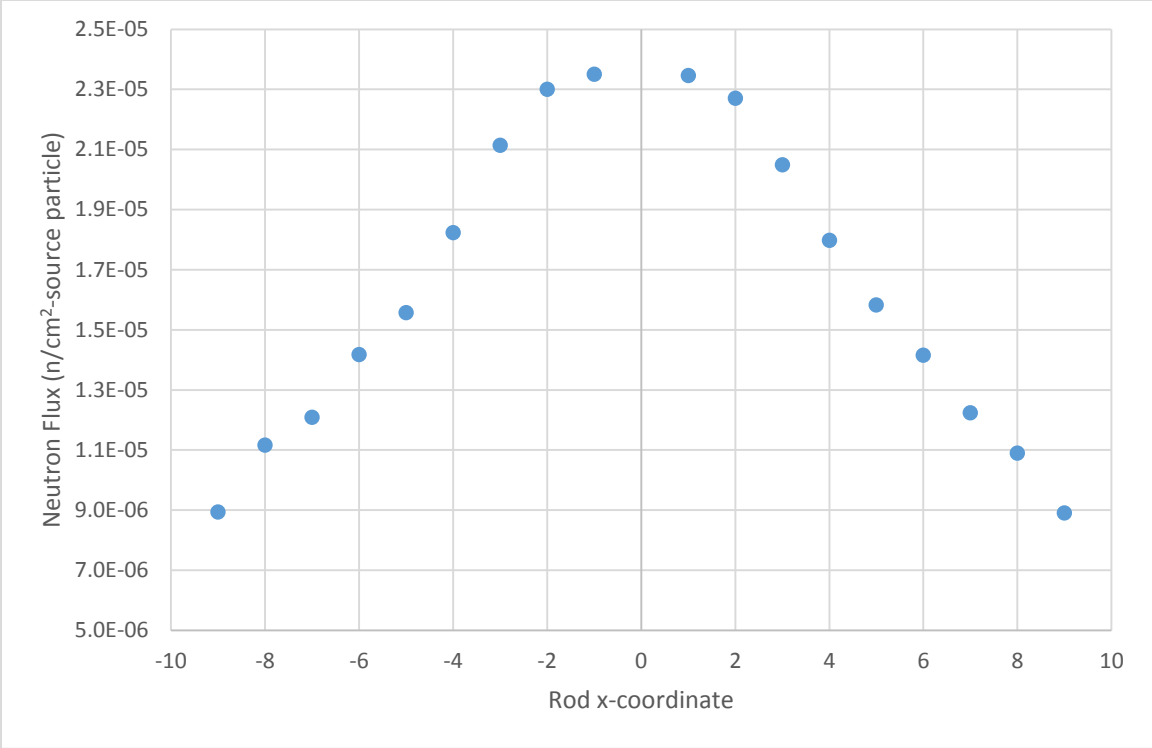

Figure A3.3: Radial neutron flux profile for 9eV-1keV

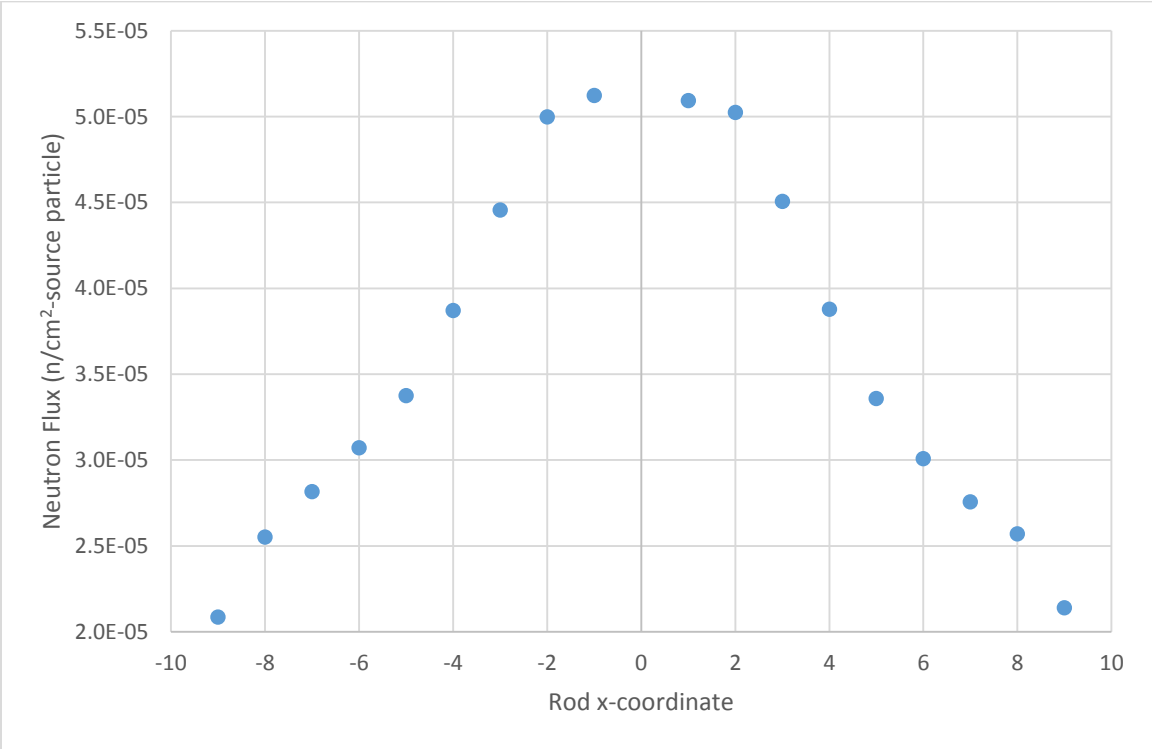

Figure A3.4: Radial neutron flux profile for >1keV

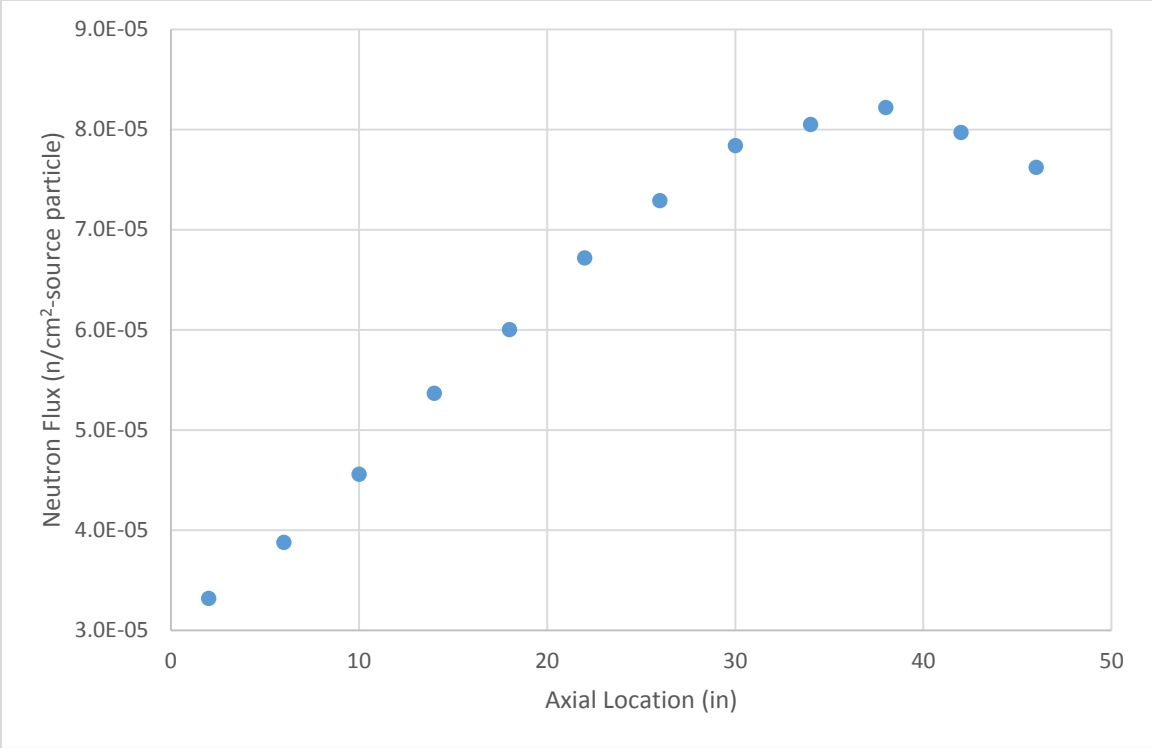

Figure A3.5: Axial neutron flux profile for 0-2eV

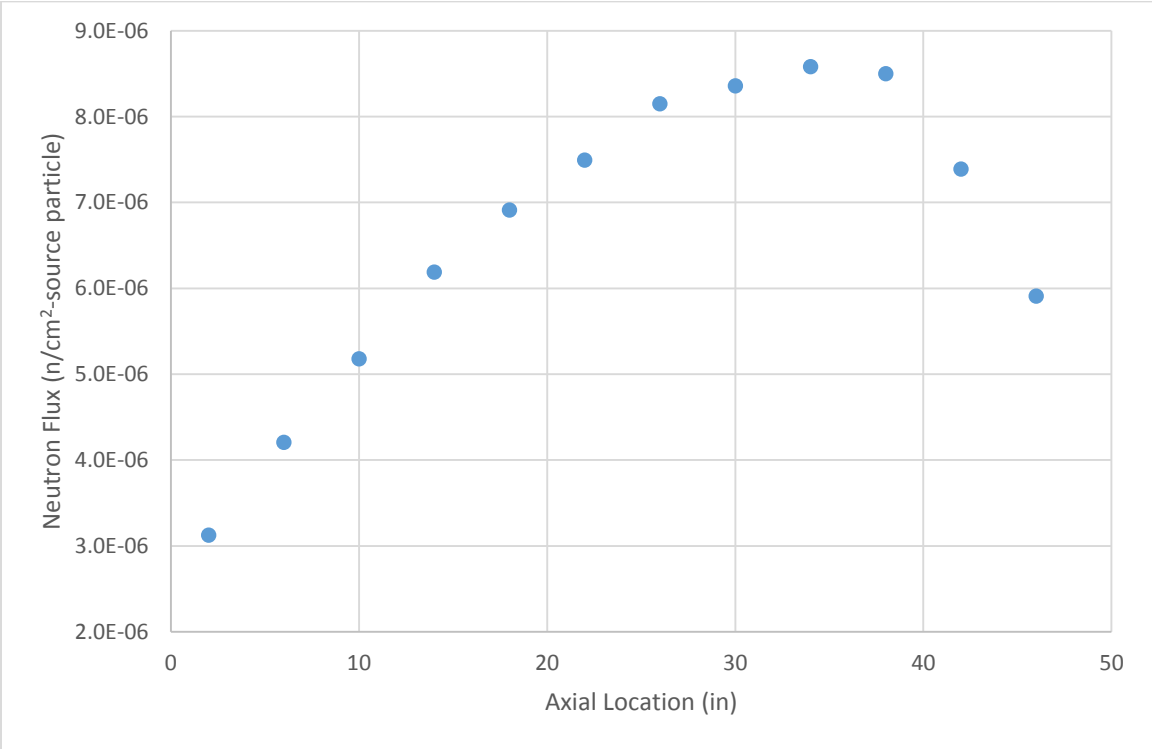

Figure A3.6: Axial neutron flux profile for 2-9eV

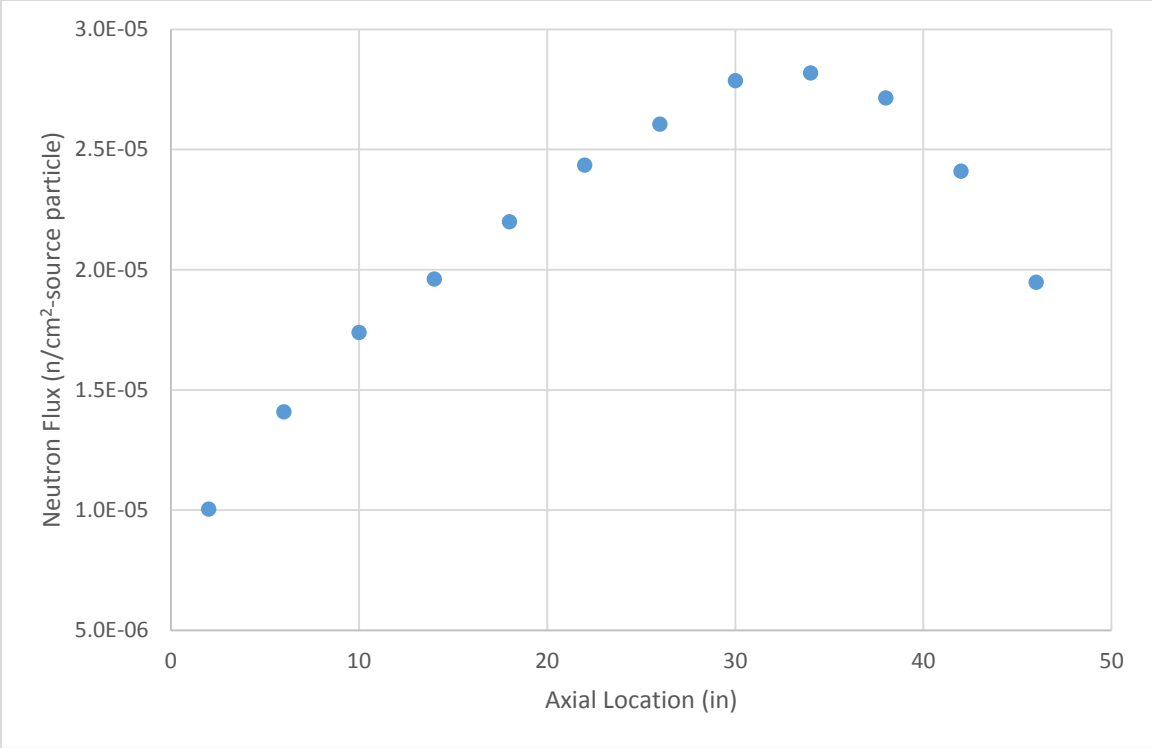

Figure A3.7: Axial neutron flux profile for 9eV-1keV

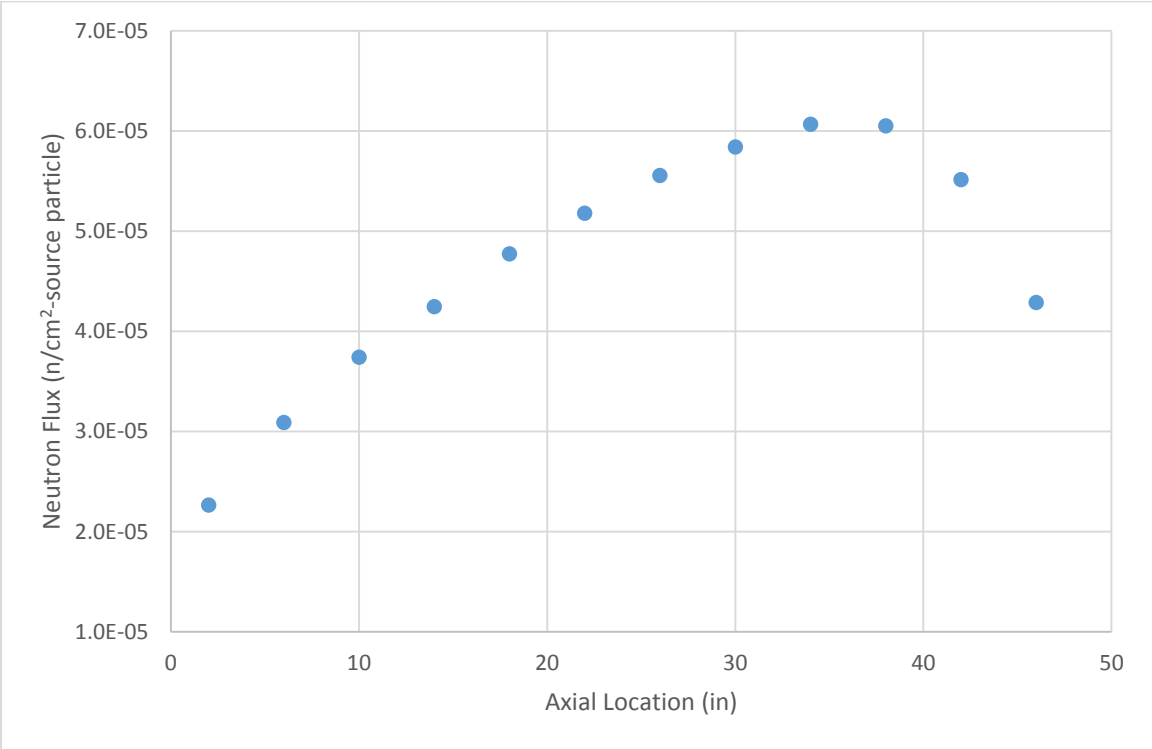

Figure A3.8: Axial neutron flux profile for >1keV